THORNTON

Thornton
Eletrônica Ltda

NER-28/14/12

Effective Core Parameters:

Σ l/A	0.739	mm^{-1}
Le	63.27	mm
Ae	81.4	mm^2
Amin	76.97	mm^2
Ve	5414	mm^3

Weight Approx. (piece) 13.9 g

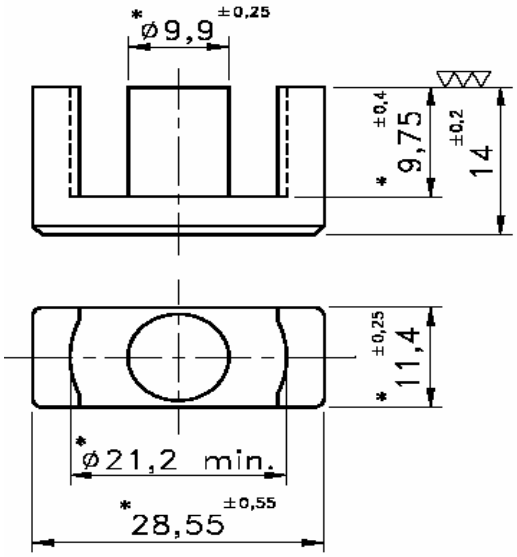

Dimensions in mm

WITH GAP

DESCRIPTION ORDER	MATERIAL	Al [nH]	Tol.%	~g [mm]	~ µe
NEER-28/14/12-150-IP12R	IP12R	150	± 8	0.78	88.19
NEER-28/14/12-150-IP12E	IP12E	150	± 8	0.78	88.19
NEER-28/14/12-200-IP12E	IP12E	200	± 8	0.9	117.58

WITHOUT GAP

DESCRIPTION ORDER	MATERIAL	Al [nH]	Tol.%	~g [mm]	~ µe
NEER-28/14/12-3000-IP12R	IP12R	3000	± 25	- - -	1763.72

Others AL's by consulting